DZW型 DZB型

本厂已通过GB/T19001-2000质量管理体系认证
Factory has passed GB/T19001-2000 Quality System Certification

多回转阀门电动执行机构

Multi-turn Electric Valve Execting agency

使用说明书

INSTRUCTION

立拓宏伟®

LI TUO

常州立拓宏伟阀门有限公司

CHANGZHOU LITUO HONGWEIVALVE CO.,LTD

目　　录
CONTENT

一、概述

BriefIntroduction …… (1)

二、型号表示方法与防爆标志

Style Explanation and Explosion-Protection Mark …… (1)

三、主要技术性能参数

Technology Specification …… (1)

四、外形及安装尺寸

Configuration Size and Installation Size …… (2)

五、结构及传动原理

Structure and Transmission Theory …… (5)

六、电气控制原理和接线

Electric Control Theory and Wiring …… (8)

七、安装方法及使用注意事项

Installation and Cautions …… (12)

八、调整

Adjustment …… (12)

九、用行程与转矩控制阀门终端位置的选择

Choice of Travel and Torsion Controlling Valve Terminal Position …… (14)

十、常见故障及排除方法

Breakdown and Elimination …… (15)

十一、检修备品

Examine and Repair Spare Parts …… (15)

十二、订货须知

Order …… (16)

一、概述

本系列阀门电动装置分户外型（DZW型）和隔爆型（DZB型）两种。适用阀瓣做直线运动的阀门，如闸阀、截止阀、节流阀、隔膜阀等，其派生产品适用球阀、蝶阀和风门等。用于阀门的开启和关闭，是对阀门实现远控、集控和自控的必不可少的驱动装置。该装置具有功能全、性能可靠、控制系统先进、使用维护方便等特点。广泛用于电力、冶金、石油、化工、造纸、煤炭、给排水等部门。

1.Brief Introduction

The Electric Valve Actuators has two types : Outdoors (DZW) and Explosion - Isolation (DZB) . They are suitable for those valves with rectilinear motion such as gate valve , stop valve , throttle valve, diaphragm valve. The derive products is suitable for ball valve,butterfly valve and air valve . It also suitable for valve opening and closing . It's necessary drive device for remote control, collection control and self control. The device features full func-tions, secure characteristics, advanced control system and convenient usage and maintenance . It ' s widely used in those industries such as electricity. metallurgy, petroleum,chemistry,papermaking, coal and water supply and drainage.

二、型号表示方法与防爆标志

1、型号表示方法

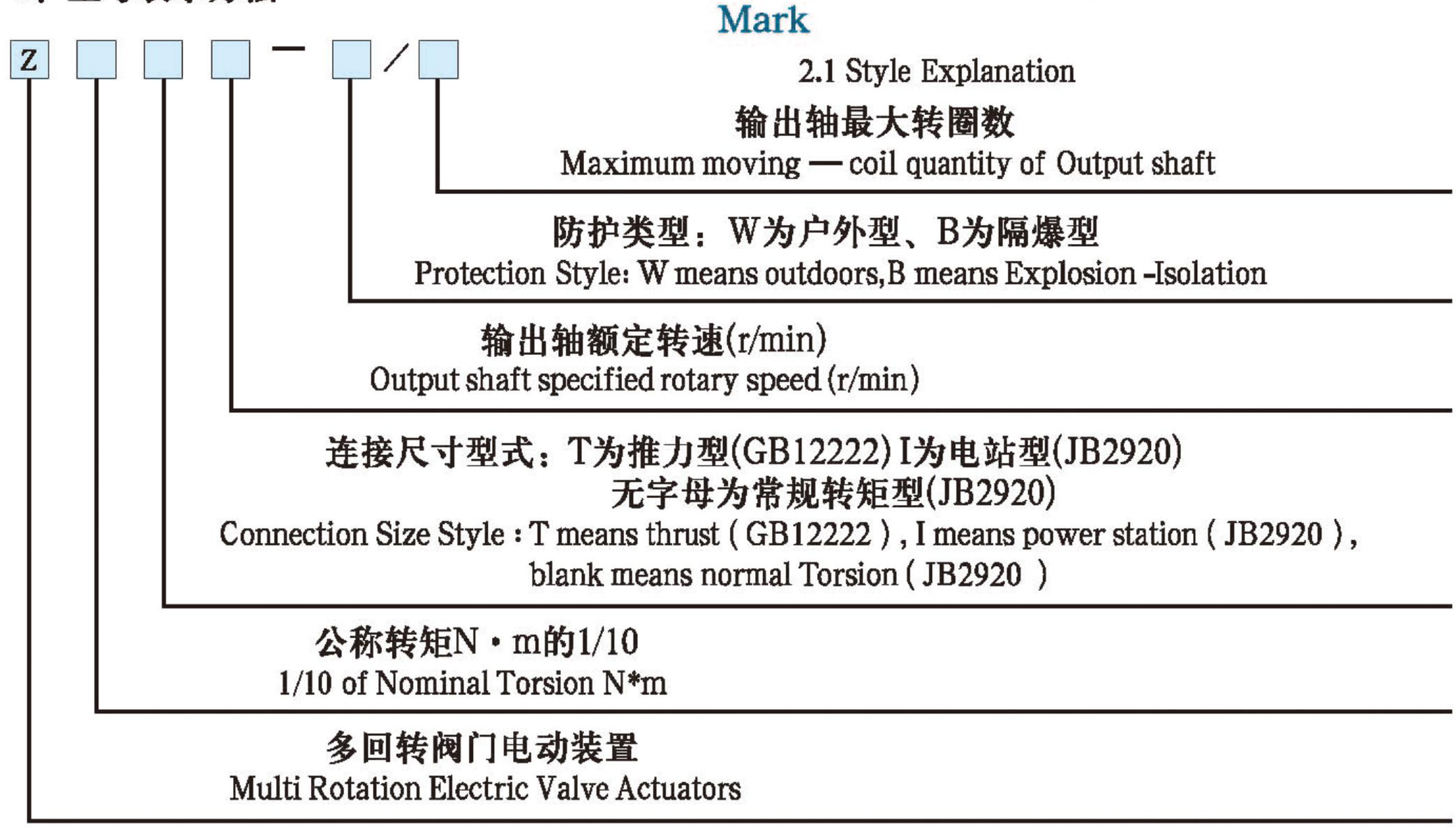

2. Styly Explanation and Explosion - Protec-tion Mark

2.1 Style Explanation

2、隔爆型电动装置的铭牌及外壳的明显处有"EX"和"d ⅡBT4"防爆标志，其代表意义如下：

2.2 There is clear Explosion -Protection mark of "Ex" and "d II BT4"in nameplate and shall on Explosion-Isolation Actuators which means as following.

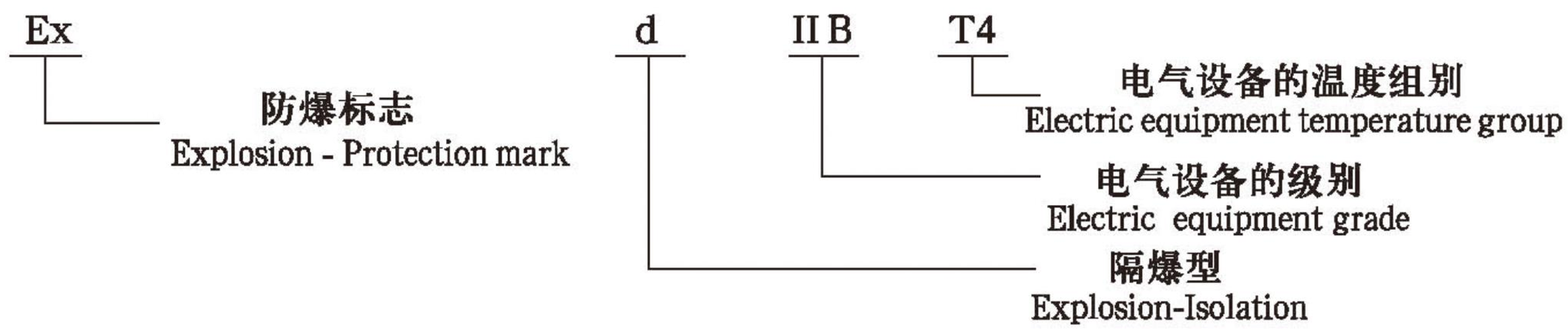

三、主要技术性能参数

1、电源：380V 50Hz(特殊要求可在订货时提出)

3. Technology Specification

1 Power: 380V 50Hz (Special request available when place order)

2、工作环境：

a、户外型用于无易燃、易爆和强腐蚀性介质的场所；隔爆型用于含有爆炸性气体、无强腐蚀性介质的场所；

b、环境温度 ：-20~40℃；

c、相对湿度 ：≤90%(25℃时）；

3、防护等级 ：IP55

4、工作制：为短时工作制，额定工作时间10分钟。

5、性能参数（见表 1）

2 Working environment

a. Outdoors style suitable for those occasion of no flammable , explosive and high corrosion material . Explosion - Isolation is suitable for those occasion of explosive air and no high corrosion material.

b. Environment temperature : - 20 ~ + 40 degree

c. Humidity : ≤90% (25 degree)

3 Protection grade : IP55

4 Working regulation : Short time with specified working duration 10 minutes.

5 Characteristics specification (Tabulate 1)

表1
Tabulate 1

阀门电动装置性能参数表

型号 style	电机 Motor 功率 Kw Power	电机 Motor 电流 A Current	输出速度 r/min Output Speed(r/min) 12	24	36	公称推力 KN Nominal Throst(KN)	允许通过阀杆直径mm Dia.Of Stem mm	最大转圈数 Max moving-coil qty.	手动速比 Manipulating Speed Ratio	参考重量 Kg Weight Kg
			输出转矩 N·m Output Torsion N·m							
DZW 5/7.5	0.09	0.6	50			20	28	50	1:1	25~26
DZB 5/7.5	0.12	0.7	75				28			
DZW 10/30	0.25	1.3		100		40	28			55~65
DZB 10/30	0.37	1.6		150	100		28			
	0.55	2.4		200	150	100	40			
	0.75	2.9		300	200		40			
DZW 45/120	1.1	3.4		450		150	48	120		130~140
DZB 45/120	1.5	4.5		600	450		48			
	2.2	6.5		900	600	200	60			
	3	9		1200	900		60			
DZW 180/500	4	11		1800		325	70	150	25:1	225~310
DZB 180/500	5.5	14		2500	1800		70			
	7.5	19		3500	2500	700	75			
	11	26		5000	3500		75			

四、外形及安装尺寸

4. Configuration and Installation Size

1、外形尺寸

4.1 Configuration Size

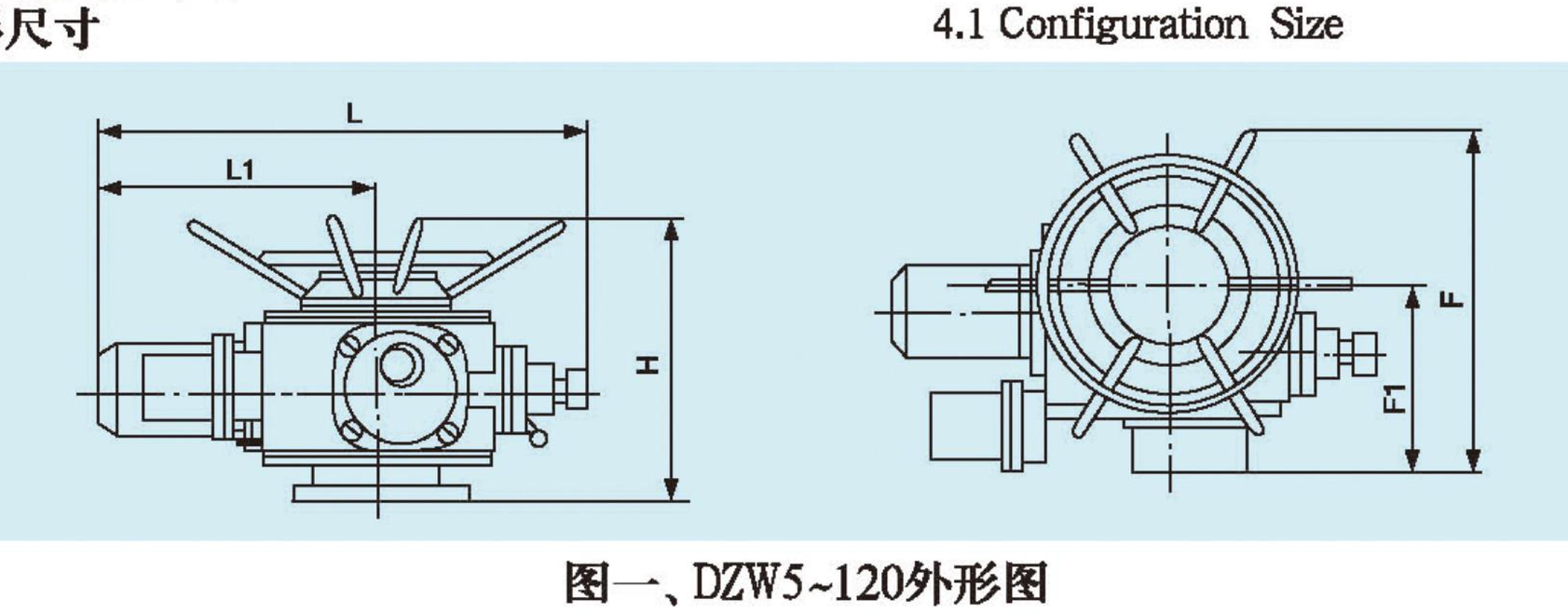

图一、DZW5~120外形图

Drawing1 :DZW5~120 Configuration

DZW型电动装置外形尺寸参数表　　表2

DZW Style Electric Valve Actuators Configuration Size specification.　Tabulate 2

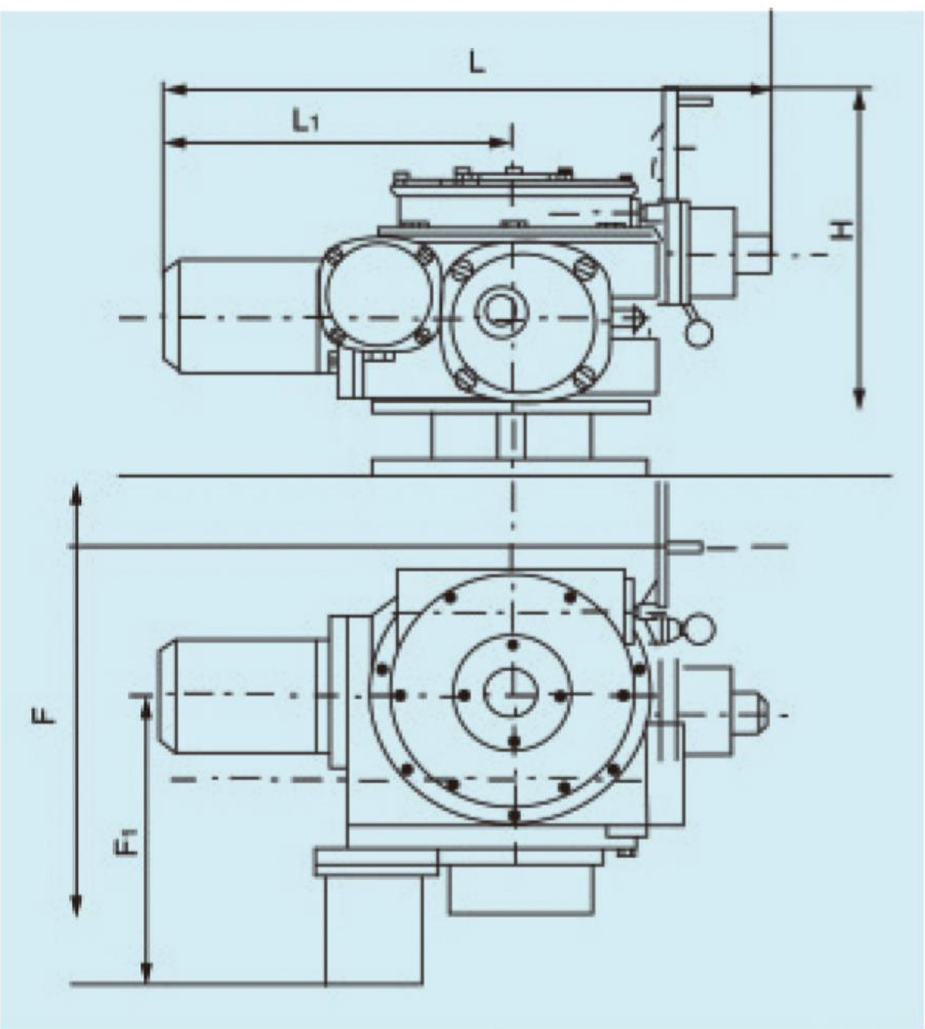

图二、DZW180～500外形图

Drawing2 : DZW180-500 Configuration

代号/Code 型号/Style	H	L	L1	F	F1
DZW5	325	400	600	340	215
DZW7.5					
DZW10	320	520	290	420	240
DZW15		530	300		
DZW20		555	325		
DZW30		595	365		
DZW45	450	675	385	576	300
DZW60		730	440		
DZW90		750	460		
DZW120		780	490		
DZW180	610	810	500	680	385
DZW250					
DZW350		915	605		
DZW500					

DZB型电动装置外形尺寸参数表　　表3

DZB Style Electric Valve Actuators Configuration Size specification.　Tabulate 3

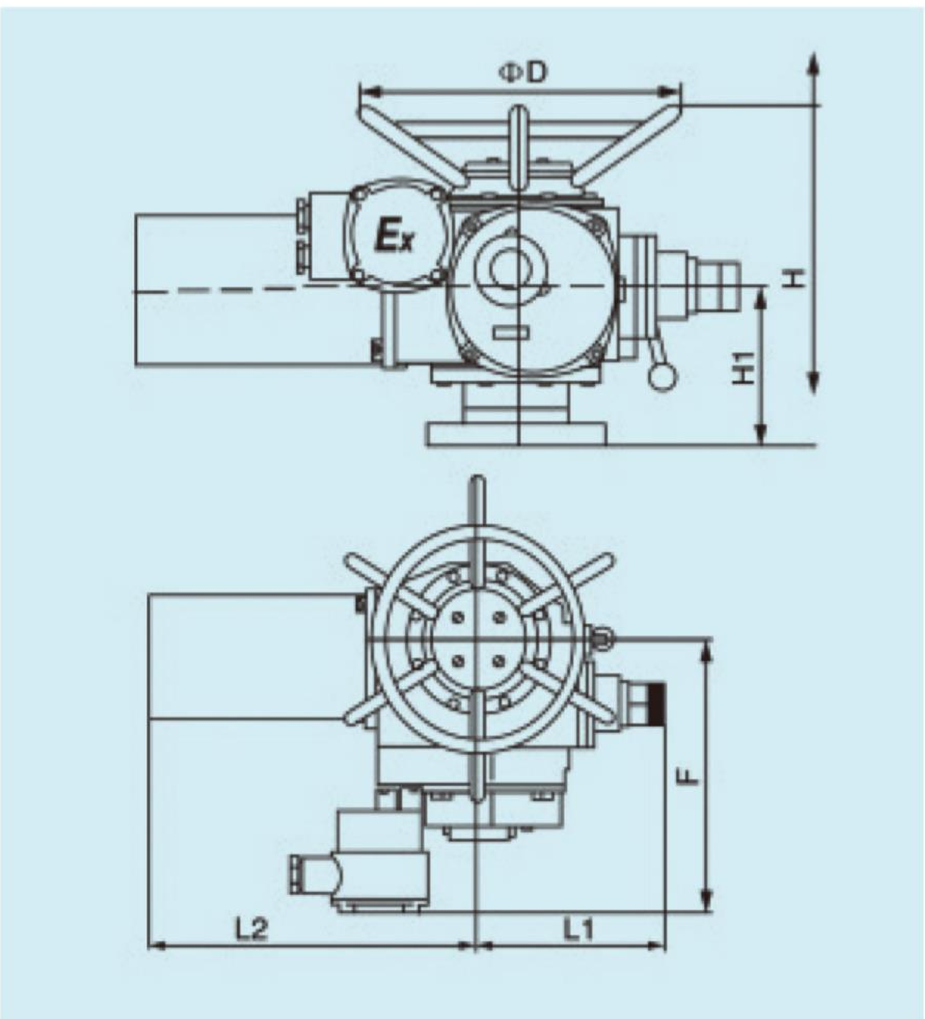

图三、DZB10-ZB350外形图

Drawing3 : DZB10-ZB350 Configuration

型　号 Style	H1	H	L1	L2	F	ΦD
DZB10/ZB15	113	282	150	287-300	313	300
DZB20/ZB30	130	316	200	295-400	317	400
DZB45/ZB60	195	415	277	394-544	391	460
ZB90/ZB120	195	453	281	412-562	426	556
DZB180/DZB250/DZB350	250	585	320	474-609	476	320

2、安装尺寸（见图四、表4）

4.2 Installation Size(See Drawing4,Tabulate4)

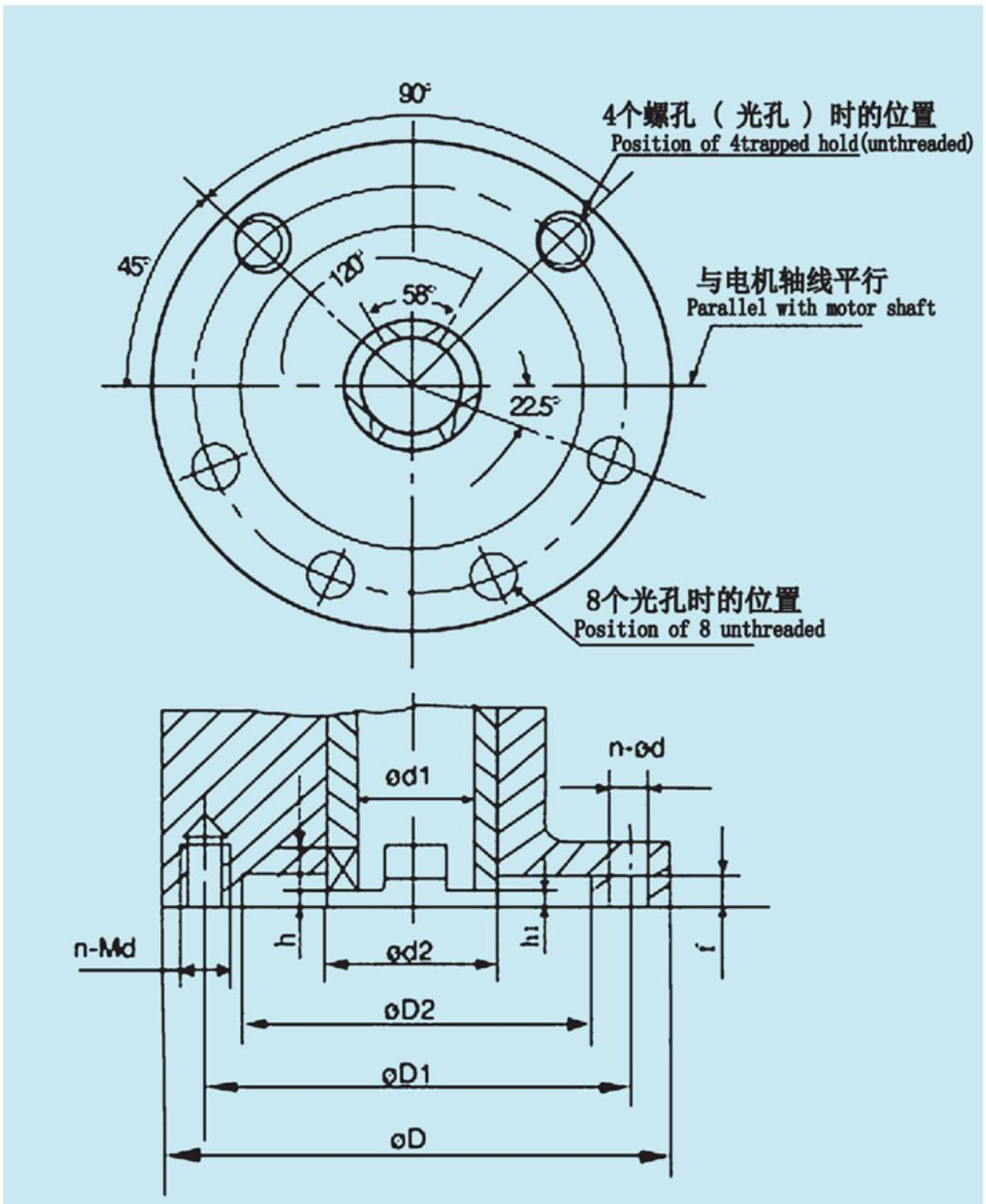

转矩型安装尺寸
Torsion Style Installation Size

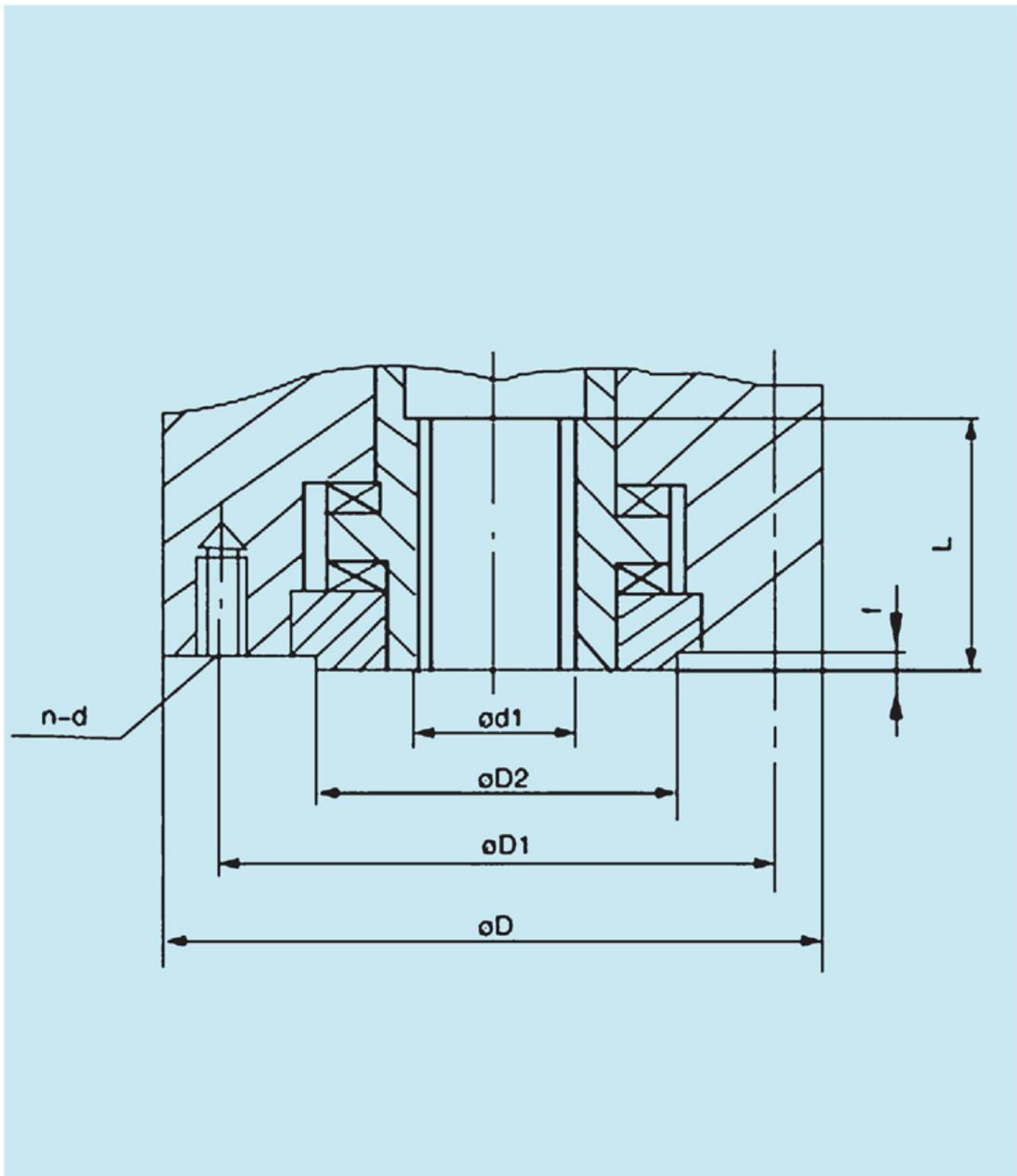

推力型安装尺寸
Torust Style Installation Size

图四、安装尺寸图
Drawing 4:Installation Wize

安装尺寸参数表 表4
Installation Size Specification Tabulate 4

	转矩型 JB2920/Torsion StyleJB2920											推力型 GB 12222/Thrust StyleGB12222								
	机座号 Base No.	D	D 1	D 1 (H9)	h1	f	h	d1	d2	d	n	法兰号 Flange No.	D	D 1	D 2 (f8)	f	d1 max	d	L	n
	2	145	120	90	2	4	8	30	45	M10	4	F10	125	102	70	3	T28	M10	40	4
	21	115	95	75	2	4	8	26	39	M8	4									
	3	185	160	125	2	4	10	42	58	M12	4	F14	175	140	100	4	T40	M16	55	4
	31	145	120	90	2	4	8	30	45	M10	4									
	4	225	195	150	2	5	12	50	72	ø18	4	F16	210	165	130	5	T48	M20	70	4
	5	275	235	180	2	5	14	62	82	ø22	4	F25	300	254	200	5	T60	M16	90	8
	51	230	195	150	2	5	12	50	72	ø18	4									
	7	330	285	220	3	6	16	72	98	ø27	4	F30	350	298	230	5	T70	M20	110	8
	8	380	340	280	3	6	20	80	118	ø22	8	F35	415	356	260	5	T75	M30	150	8

1、DZB型连接尺寸同ZW型连接尺寸相同.
2、(1)适用于电站阀门.

Note: 1. DZB Type connection size is same as ZW Type
2.(1) suitable for Power station valve

五、结构及传动原理

阀门电动装置由六个部分组成，即电动机、减速器、控制机构、手电动切换机构、手动机构及电气部分．其传动原理(见图五)．

5. Structure and Transmission Theory

Electric Valve Actuators is made up of six parts as following:motor,reduction box, control system, manipulating and electrodynamic swich structurcture ,manpulating structure and electric . Drawing 5 is transmissin theory

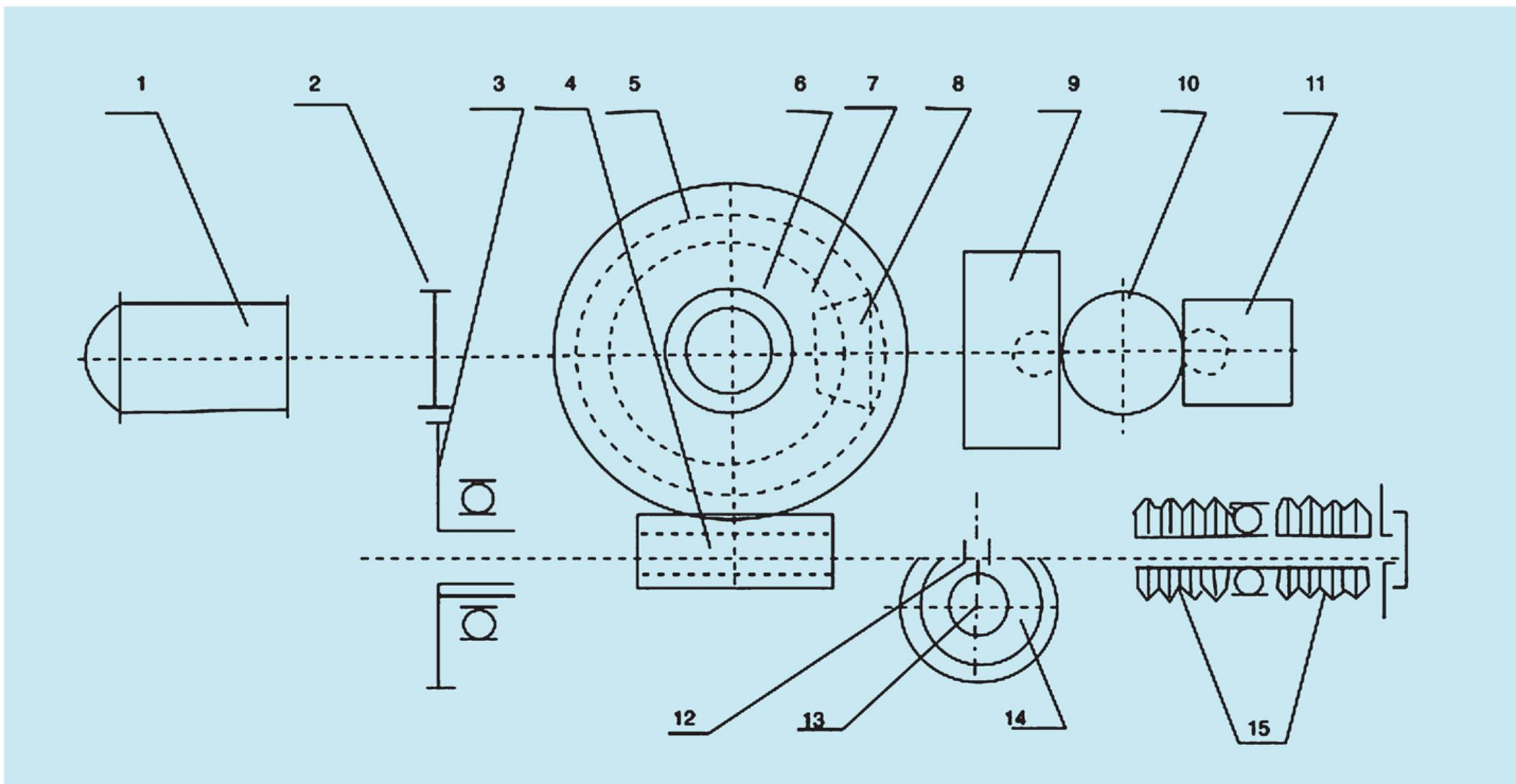

图五　传动原理图

Drawing 5 Trasmision thecory

1、电机/mctor　2、3正齿轮/spurgear　4、蜗杆/wom　5、蜗轮/iwormgear　6、输出轴/douput shaft
7、8 伞齿轮/bevel gear　9、行程控制机构/travel mechanism　10、中间齿轮/mid gear
11、现场可调式位置指示器/site adjustable position indicator　12、蜗杆上环槽/worm loop slot
13、曲拐/bath　14、转矩控制机构/torsion mechanism　15、蝶簧组/butterfly spring group

1、电动机

隔煤型采用YBDF2隔爆型阀门用三相异步电动机，户外型采用YDF - W户外型三相异步电动机，该电动机为短时工作制，额定持续工作时间为10分钟。

2、减速器

由一对正齿轮和蜗杆付组成，电动机的动力经减速器传递给输出轴。

1.Motor

Explosion . Isolation type use YBDF2 Explosion-Isolation valve three phase asynchronous motor ; outdoor type use outdoor threc phasc asynchronous motor . The motor is working under short time regulation and specified continuous working duration is 10minutes.

2. Reduction box

It's made up of one pair of spur gear and worm . The drive is transmitted to output shaft via reduction box.

3、控制机构

由转矩控制机构、行程控制机构及开度指示器组成。用以控制阀门的开关和指示阀门的开度。

(1)转矩控制机构（见图六）：

3.Control strcture

It's made up of torsion mechanism, travel mechanism and opening range indicator so that it can control valve open/ close and opening range.

3.1 Torsion Mechanism (See Drawing 6)

图六 转矩控制机构

该机构根据蜗杆串动原理，在输出轴上负荷超过蝶簧的预紧力时，蜗杆就产生轴向位移，通过杠杆机构，触动微动开关，使电机断电，以达到关严阀门或开向起保护作用，通常配开关向各一只终端微动开关。

该机构具有以精确的转矩整定值来操作阀门和防止阀门结构损坏的特点。

转矩值及范围可按用户需要整定，如果没有特殊要求，则可按调整的最小动作力矩整定。

(2)行程控制机构（见图七）：

由十进位齿轮组、顶杆、凸轮和微动开关组成，简称计数器。其工作原理是由减速箱内的一主动小齿轮(Z=8)带动计数器工作。如果计数器按阀门开或关的位置已调整好，当计数器随输出轴转到预先调整好的位置(圈数)时，则凸轮将被传动90度，迫使微动开关动作，切断电源，电机停转，以实现对电动装置行程(转圈数)的控制。为了控制较多

The struchure use worm transmission theory, When the load on output shaft is over butterfly spring pre-set strength, the worm will movc along the shaft and touch tremble switch via lever structure and turn off the motor. So that it can turn off closely valve or direction to protect、Usually two tremble switch are available in open and close direction respectively.

The structure has precise torsion to operate valve and also prevent valve structure damage.

Also, the torsion range can be set up by customer request, The min. torsion will be set up ifno special request.

3.2 Travel Mechanism (See drawing 7)

It's made up of decimal gear group, bar ,cam and tremble switch and is called counting device later, Working theory as following ：Driving small gear(Z= 8) drive counting device working, If counting device is set up based on valve open/close position, when counting device turn to set position (cylinder number) with output shaft, the cam will be drove 90 degree and make tremble switch action to cut down power, The motor stop and so that it control electric actuators travel (cylinder number).In order to control valve with more cylinder numbers, adjust cam turning right 180or270 degree to make tremble switch action.

圈数的阀门，右调整凸轮转180度或270度再迫使微动开关动作。

行程控制机构最多可提供四对微动开关。即开方向有四只微动开关，其中有四个常开接点、四个常闭接点：关方向有四只微动开关，其中有四个常开接点、四个常闭接点，均引接到电动装置的接线端子上，能满足电站各种控制线路的要求。

switch action

The travel mechanism can offer four pair of tremble switch at the most . It means that open direction has four piece of tremble switch and among them there are four normally open connection point and four normally close connection point . Also in close direction, there are four piece of tremble switch and among them there are four normally open connection point and four normally close connection point . They all connect the terminal of electric actuators and can meet demand of many konds controlling connection.

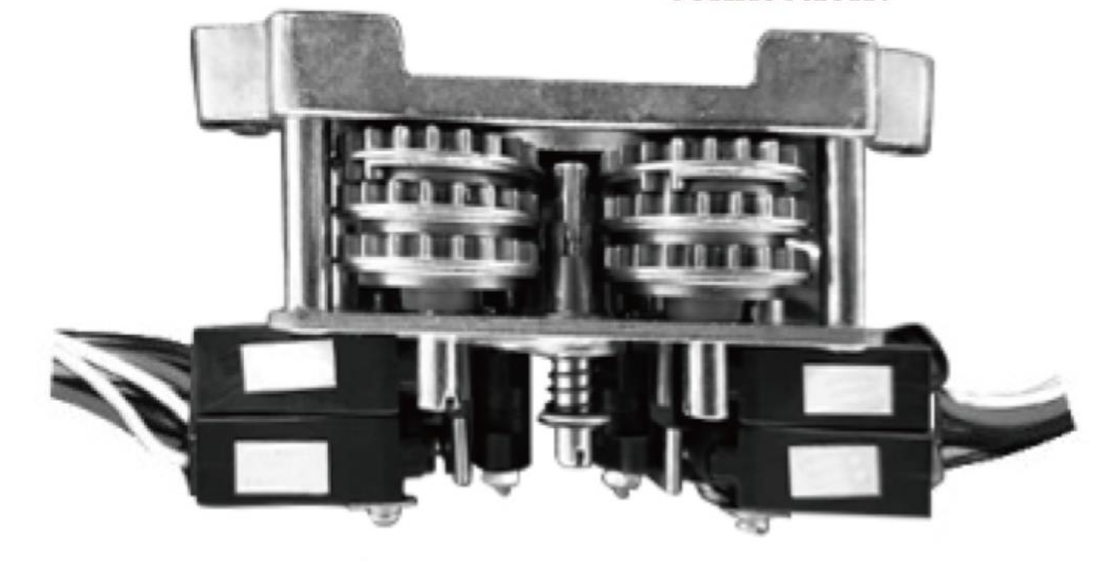

图七 行程控制机构

(3) 现场可调式开度指示器(见图八)：

由减速齿轮组、调节齿轮、阀门开度表盘、凸轮、微动开关及电位器组成。现场调试时，可根据所配阀门开关的圈数，将调节齿轮调整到所需位置，并与减速齿轮组啮合(在立柱上有所需圈数的数字)。当阀门在开启和关闭的过程中，开度盘经减速后转动，指示阀门的开关量，开度盘上最大角度可以调整，达到指示角度与阀门开关量同步。电位器的动片与开度盘同步，供远传指示阀门位置用。根据用户需要，可增设中途开关。

3.3 site adjustable open range indicator(See Drawing 8)

It's made up of reduction gear box,adjustable gear, valve open range dial plate, cam ,tremble switch and potentiometer . When site adjust, the adjustable gear can be set at right position to tooth the reduction gear box based on valve switch cylinder numbers (The wanted cylinder numbers is marked in pillar). The open range dial plate can drive after reduction to make valve open/close capacity when valve in open/close process.The max . angel of open range dial plate is adjustable to reach synchronism of pointed angel with valve open/close capacity . Potentiometer moving plate is synchromism with open reach synchronism of pointed angel with valve open/close capacity. Potentiometer moving plate is synchronism with open range dial plate for remote indication valve poeition. The mid switch is available according to customer re-quest.

图八 可调试开度指示器

开度指示器内设一微动开关和一凸轮。当电动位置运转时，凸轮转动使微动开关周期性动作，可使控制室操作指示灯闪烁，以示电动装置的工作状态。

一般电厂控制室操作台上设红灯（开阀门）绿灯（关阀门），根据我厂提供的控制原理图，指示灯可显示五种工作状态：

① 阀门处于全开状态，红灯亮，绿灯熄灭；

② 阀门处于全关状态，绿灯亮，红灯熄灭；

③ 阀门处于开启过程中，红灯闪烁，绿灯亮；

④ 阀门处于关闭过程中，绿灯闪烁，红灯亮；

当阀门在启闭过程中，如中途停止，则红绿灯皆亮；

4、手电动切换机构

为半自动切换，即由电动变为手动时需要人工操作，而由手动变为电动时系自动远行。

5. 手动机构

由手轮和手动轴所组成，供安装调试和处理故障等需手动时使用，对于手动速比为1:1电动装置也可以切断电源后，旋下蜗杆端部的压花螺帽，按规定方向 用扳手使蜗杆方榫旋转，使阀门稍开后再使用手轮（DZW$^{5}_{7.5}$型和DZB$^{5}_{7.5}$型电动装置无压花螺母和蜗杆方榫）。

六、电气控制原理和接线

1、电气控制原理

DZW型和DZB型电动装置的电气控制原理相同(见图)，本图是根据电力部规划设计院制定的阀门电动装置《95典设线路》设计。为向用户提供足够的控制定点，电装选种控制机构上最多可设四组微动开关(开、关向各四只)，设有51芯接线端子(特殊订货提供)，

There are one tremble switch and one cam in open range indicator . When electric actuators operate , cam transmission will make tremble switch periodic action to make control unit indicator flash showing its working state .

Usually , there are red light (Open valve) and green light (Close valve) in openation desk of power station. The indicator has five working statc according to our factory control theory :

3.3.1 Valve all open , red light on , green light off

3.3.2 Valve all close , green light on . red light off

3.3.3 Valvc in opening process , red light flash , grccn light on

3.3.4 Valve in close proccss , green light flash , red light off.

The red and green light will all on if valve pause when in open/close process.

3.4 Manipulating and electrodynamic switch structure

It ' s semi automation switch. Manual openation is necessary when electrodynamic changing into Manipulating but automation vice versa

3.5 Manipulating structure

It ' s made up of hand wheel and manipulating shaft . Manipulating is necessary when installation , adjustment and deal with breakdown . Regarding the manipulating ratio 1:1 electric actuators , it also can be done after cut off power , to screw knurling screw cap at the top of worm , turn the square tenon of worm as specified direction via wrench , and use hand wheel when open valve little (There is no knurling screw cap and square tenon of worm in DZW $^{5}_{7.5}$AND DZB $^{5}_{7.5}$ Electric actuators)

6. Electric Control Theory and Wiring

6.1 Electric Control Theory

The Electric Control Theory of DZW and DZB Type is same as drawing . (See drawing) The drawing is designed based on Valve Electric Actuators<95 Typical Circuitry> established by planning and Designing Institute of Electricity Department . In order to offer enough control fixed piont , four pairs of tremble switch (Four piece in open/close direction respectively) can be set at the most in electric actuators control stucture . Also 5 I core connection ter-

通常按开、关向各二只微动开关供货.

minal is available (Special order) .Usually two piece tremble switch are offered in open /close direction respectively .

Note : Parts inside dot and row range is in electric actuators.

电气控制原理图 Electrical control schematics

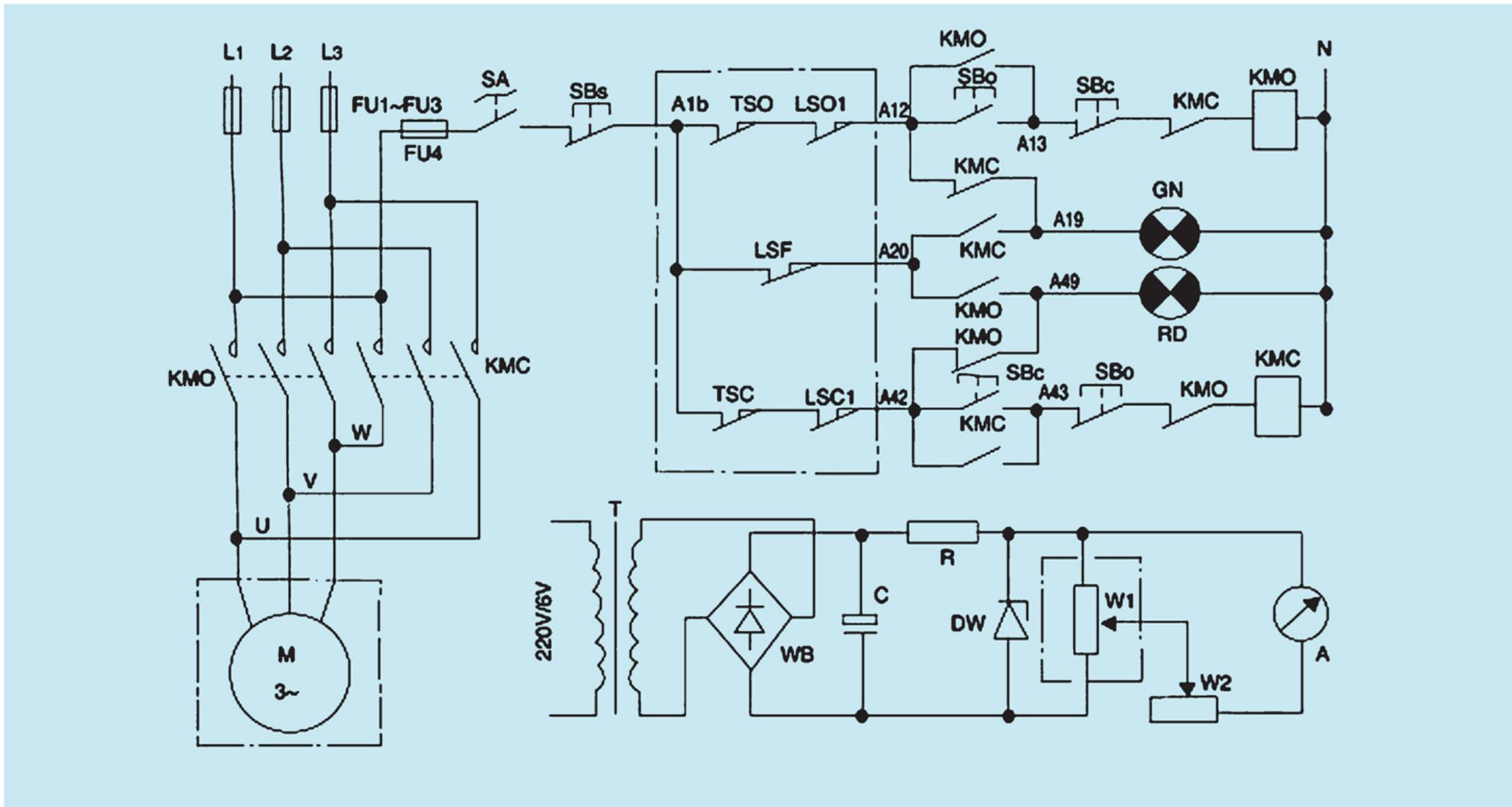

2、端子接线图

6.2 Terminal wiring

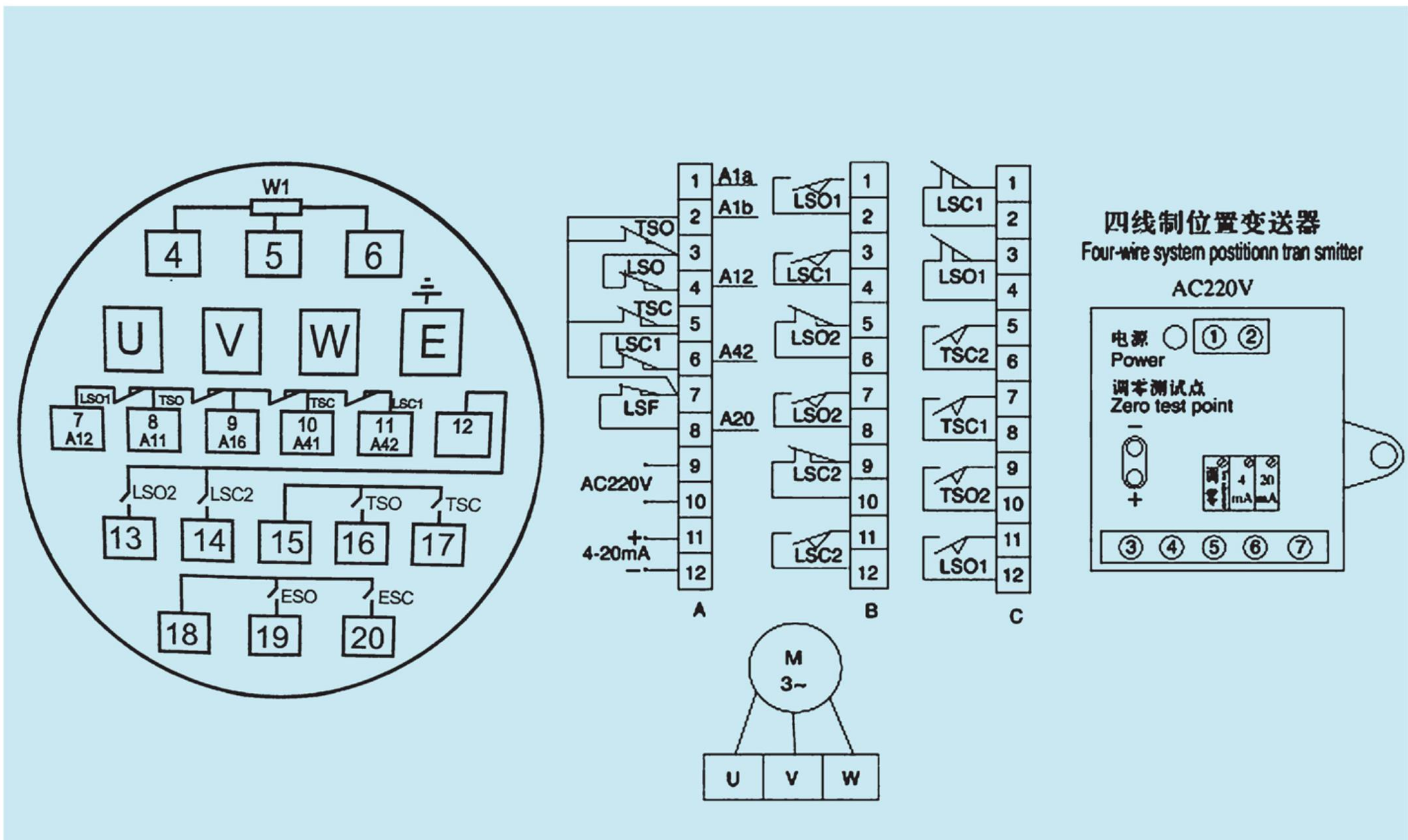

95 典设端子接线图

< 95 Typical Circuitry Wiring>

常规供货端子接线图

Normal /Supply Terminal Wiring

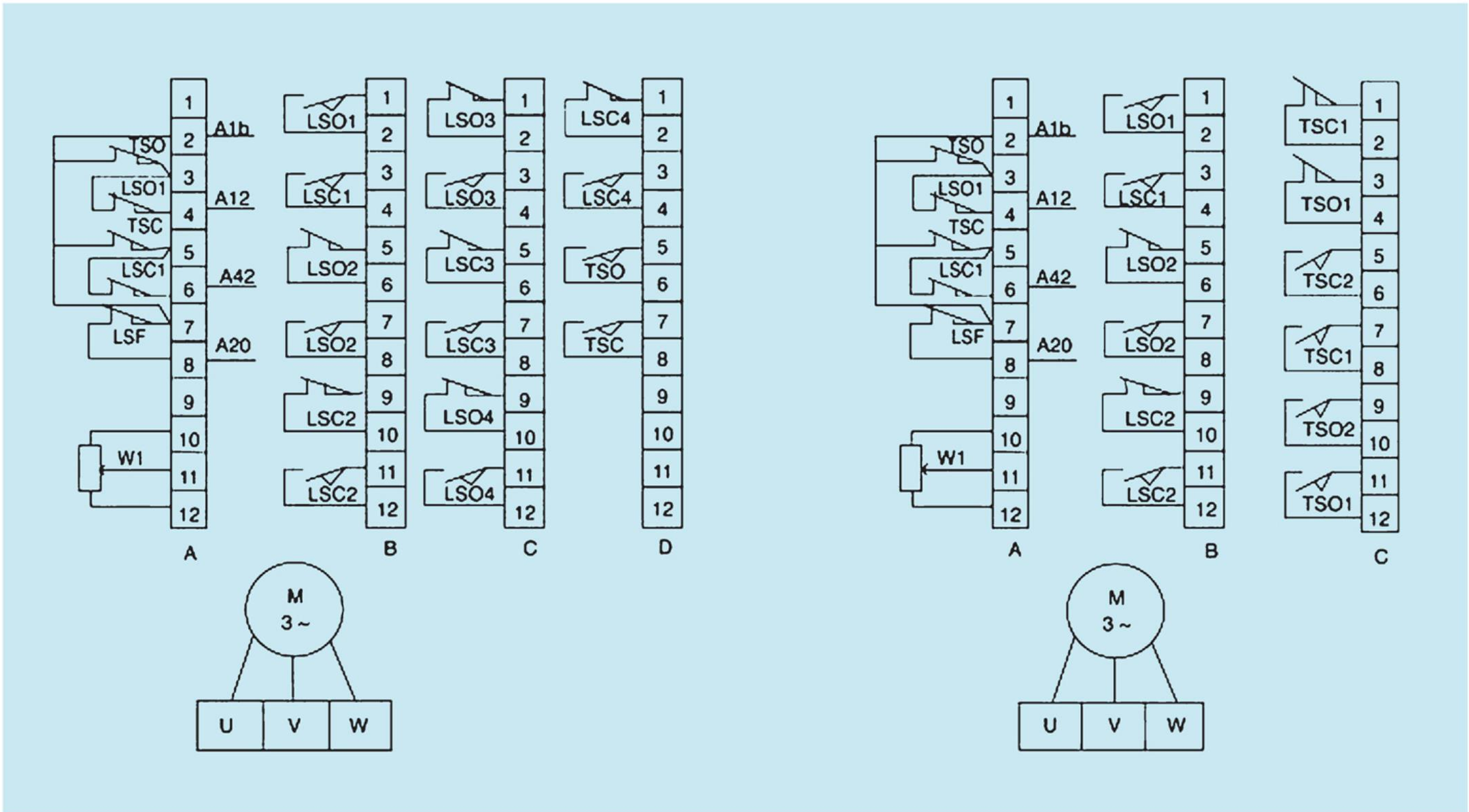

3、DZB型电装电缆引人装置

电装接线盒有两个电缆引入装置，一个引入电机动力电缆，一个引入控制电缆，使用的动力线电缆必须有地线，并与接线端子上的接地端子相接。引人电缆直径规格(见图九)和表五，接好线后应装好并压紧密封圈，密封圈的邵氏硬度为45~55度，损伤及老化的应及时更换。

6.3 DZB Type Electric Actuators Cable Inducting Device

Electric Actuators connecting box has two cable inducting device . One induct motor drive cable . The other induct control cable . The drive cable must have ground electrode and should connect with ground terminal on connecting terminal.Please refer to Drawing 9 and Tabulate 5 for inducting cable diameter specification . The I lock ring must be installed and pressed tightly after connecting .The lock ring Shao hardness should be 45 - 55 degree and those damage and ageing must be changed in time .

表5

Tahulate 5

密封圈同心槽内孔直径（mm） Inner diameter of oncentric groove of lock ring(mm)	Ø	Ø 19	Ø 24
允许引入电缆公称直径（mm） Permitted inducting cable nominal diameter(mm)	Ø 16 ±1	Ø 19 ±1	Ø 24 ±1

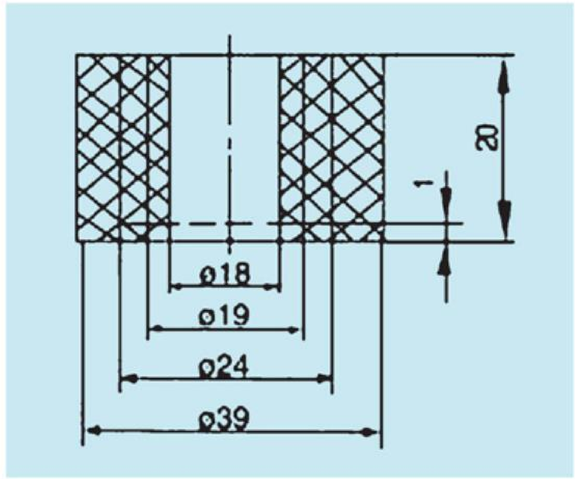

图九 密封圈

Drawing 9:Lcck ring

4、电气元件明细表/6.4 Electric Parts List

序 号 Serial No.	代 号 Code Name	名 称 Description	型号规格 Type Specification	数量 Quantity	备注 Remark
1	FU1～FU3	熔断器 Fuse	RL1-15/15A	3	
2	FU4	熔断器 Fuse	BLX-1	1	
3	KMO KMC	交流接触器 Altemating Contactor	CJ10-10A/220V	2	
4	SBo SBc SBs	开关停按钮 Switch Stop button	LA19-11	3	红绿黄各一只 Red, Green, Yellow each one
5	SA	电源开关 Power Switch		1	
6	RD GN	指示灯 Indicator	ND3-220V	2	红绿各一只 Red, Green each one
7	T	变压器 Transformer	220V/6V 5W	1	
8	WB	整流桥堆 Rectifier Diode	1A/100V	1	
9	C	电解电容 Electrolysis Capacity	100uF/16V	1	
10	R	电阻 Resistance	1W 100Ω	1	
11	DW	稳压二极管 Zener Diode	2CW13 4.5V	1	
12	W2	电位器 Potentiometer	WX14-12 1K	1	
13	A	开度指示表 Open Range Instruction SHeet	85C1 0~20mA	1	*
14	W1	电位器 Potentiometer	WX14-12 330Ω	1	*
15	LSO LSC	行程开关 Travel Switch	HWK-22A	2-4	*
16	TSO TSC	转矩开关 Travel Switch	DK3-2	2	*
17	LST	闪光开关 Flash Switch	V-157	1	*
18	M	电机 Motor	YBDF2(隔爆型/Expolosive-Isolation Type) YDF-W(户外型/Outdoor Type)	1	*

注：带“＊”器件均在电装上，其余器件由用户自备

Note: * means electric parts are in electric actuators and other parts should be prepared by customer

七 、安装方法及使用注意事项

1. 本装置可以重直安装、水平安装，应便于接线、调试和手动操作。

2. 安装与阀门联接的牙嵌，轴向间隙不小于1~2mm。

3. 安装后初次使用必须按调试要求进行逐项调试，检查各部件正常后才能投入使用。

4. 本装置系采用阀用三相异步电动机，额定持续工作时间为10min，高度时应予注意。

5. 安装前应进行下列检查，若不符合要求则不许使用：

（1）防爆标志和防爆合格证编号（对于ZB型电装）；

（2）所有紧固螺栓都应有弹簧垫圈，并已拧紧；

（3）所有隔爆零件无裂纹和影响隔爆性能的缺陷（未拆部分可不作检查）。

6. 接线时，电缆芯线置于二个垫圈之间，可靠联接，保证接触良好和电气间隙要求。

7. 通过接线罩体密封圈的电缆在压紧螺母拧紧后，应保证电缆与密封圈之间无间隙。

8. 内、外接地均应可靠。

9. 拆装电动装置时应注意保护隔爆面，所有隔爆面不得损伤和锈蚀，隔爆面应涂204-1型防锈油。

10. 搬动时应小心轻放，保持干燥，防止接触腐蚀性物质，以免损坏电气元件和机构零件。

八、调整

调整转矩、行程时，必须检查位置指示器上的电位器是否已脱开，（把电器轴上齿轮的紧定螺钉松开即可脱开）以防损坏。新装的电动装置首次电动时，必须检查电机相序，控

7. Installation and Cautions

7.1 The device can be installed vertically or horizontally forconvenient wiring , adjustment and hand operation

7.2 The shaft direction gap should not less than 1-2 mm when install tooth insert connecting valve

7.3 The first use must after adjust each item under regulation and every part in normal

7.4 The device usr valve three phase asynchronous motor and specified continuous working duration is 10 minutes.

7.5 Following inspection should be carried out before installation otherwise use prohibited:

7.5.1 Explosive - Protection mark and certificate of soundness code (For ZB Type)

7.5.2 All tighten bolt should have spring gasket and they are tightened.

7.5.3 No crackle and fault that may affect explosive - isolation characteristics in all explosive - isolation parts . (No necessary to inspect non - dismantle part)

7.6 Cable core line should be set between gasket to ensure secure connection , good contact and electric gap reauest

7.7 It must be no gap between cable and lock ring when cable cross lock ring of connecting cover and locknut is tightening .

7.8 Both inner and outer ground connecting should be secure

7.9 Be careful to protect explosive - isolation face when dismantle or install electric actuators and ensure no damage and stain . 204- 1 type stain - proof oil is suggested

7.10 Be careful when move . keep dry and prevent contacting corroding material to protect electric parts and structure parts.

8. Adjustment

Check if potentiometer in position indicator has come away when adjust torsion and travel to prevent damage . (Come away by loosing lock bolt of gear on electrical appliance). The phrase order and control circuit must be inspected before new installed electric actuators first op-

制线路接线是否正确，以防电机失控。

1、转矩控制机构调整:

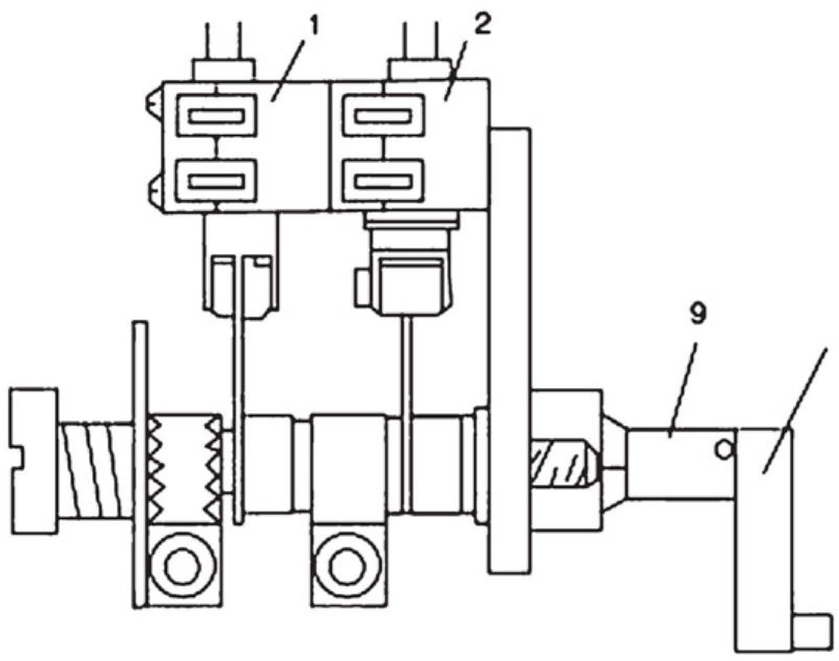

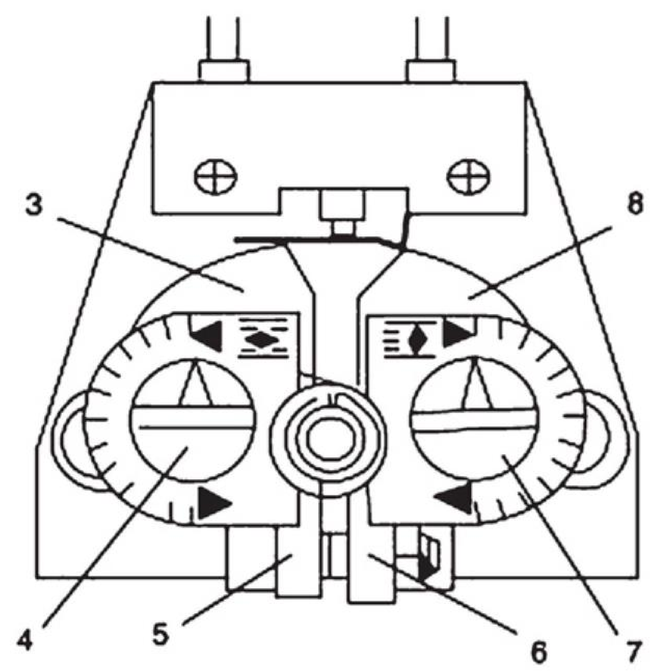

1、2微动开关/temble switch 3、8 凸轮/cam 4、开向调节螺钉/oening adjust bolt 5、6 支架/support frame 7、关向调节螺钉/close adjust bolt 9、转矩传动轴/torsion drive shaft 10、曲拐/crutch

每台阀门电动装置的切断转矩及转矩最小/最大范围均已调整，转矩值按用户的要求设定，如果用户无要求则设定在铭牌转矩上。如果需要，用户也可以自已在转矩 范围内进行调整，只要旋转图中件4开向调节螺钉，即可调节开向转矩。

旋转中凸轮与微动开关压片之间的距离越小，则转矩值越小，反之则转矩值越大。转矩调整值分13档有级调整，最大转矩整定在第13格上。同样，只要旋转图中件7关向调节螺钉即可调节关向转矩。在调整过程中应注意不要调整件5、6支架上的内六角螺钉，否则将全改交出厂时阀门电动装置的调整参数，调整时应先调关向，后调开向。

2、行程控制机构调整:

(1) 用手动将阀门关严。

(2) 脱开行程控制机构，用螺丝刀将行程控制机构中顶杆推进并旋转90°，使主动力小凶轮与计数器个位齿轮组脱开。

(3) 用螺丝刀旋转“关”向调整轴，按箭头方向旋转直到凸轮压住弹性压板，使微动开关动作为止，则关向行程初步调整好。

(4) 松开顶杆使主动齿轮与两边个位齿轮正确啮合，为保证其正确啮合，在松开顶杆

The cut down torsion and min./max. range of each valve electric device have been adjusted and torsion is set up by customer request . The set up will be marked in name plate torsion if customer no request . Customer can also adjust torsion with the range if necessary . Customer can adjust opening torsion by turning adjustment bolt (Part 4) of Drawing

The torsion will become smaller when gap between cam and tremble switch get smaller otherwise it become bigger . The torsion adjustment can be done by 13 steps and biggest torsion is set up in No.13. In the same way, you can adjust close torsion when turn close adjustable bolt of Part 7 in drawing . Please make sure don't adjust the socket head screw in frame of support frame in the process otherwise all the factory - adjusted control will be changed You should adjust close then open direction.

8.2 Travel mechanism adjustment

8.2.1 Turm off valve tightly by hand

8.2.2 Come away the travel mechanism , push and turn 90 degree of bar in travel mechanism via screw driver and make driving small gear come away from unit gear of counting device .

8.2.3 Turn close adjustable shaft via screw driver following arrow direction till cam pin spring plate and make the tremble switch action . Then close travel is ad - justed well .

8.2.4 Loosen the bar to make driving grar tooth with two unit gear . To ensure the right tooth , after loosen

后，可用螺丝刀稍许转动调整思，此时可以电动打开几圈，然后关闭，视关向行程动作是否符合要求，如不符合要求，可以按上述程序重新调整。

（5）开方向调整：在关方向高速好以后，用手将阀门开到所需的位置（注意此时的行程控制机构不能脱开，否则关向调整又被打乱），然后脱开行程控制机构，旋转“开”向调整轴，按箭头方向旋转直到凸轮压住弹性压板，使微动开关动作为止，再使行程控制机构与主动齿轮啮合，则开向行程调整完。行程控制机构调整完后，可反复试操作几次。一般开阀门控制在全行程90%左右。

3、位置指示器的调整：

（1）在调整好转矩、行程的基础上调整位置指示器和远程电位器。

（2）将阀门关闭（手动或电动）。

（3）首先根据阀门的最大转圈数将齿轮组上的调节齿轮调到相应位置上，再将表板的关符号“ ◆ ”转到指针处，转动电位器使电位器上零位上，并使电位器轴上的齿轮与开度轴上的齿轮啮合，拧紧电位器轴上齿轮的紧定螺钉；然后开启阀门到位，再将表盘的开符号“ ◆ ”转到指针处即可。

bar ,you can turn adjustable shaft slightly via screw driver . You can do it via electrodyamic and then turn off at the moment to check if the close travel comply with the request. You can try it again following above program if fail .

8.2.5 Open direction adjustment. Turn the valve to wanted position by hand after close travel adjustment finish (Attention : Make sure don't come away the travel mechanism at the moment otherwise the close travel adjustment will be confused .) Then come away the travel mechanism and turn “open” adjustable shaft following arrow direction will cam pin spring plate and make the tremble switch action . Then make the travel mechanism tooth with driving gear . Thus finish the close travel adjustment . You can try operating several time . Usually valve open control at 90% of total travel

8.3 Position indicator adjustment .

8.3.1 You should adjust the position indicator and remote potentiometer when finish torsion and travel adjustment .

8.3.2 Turn off valve (Hand or electrodynamic)

8.3.3 Turn the adjustable gear to right positoin according to max . number of turns of the valve , turn the dial plate close mark “ ◆ ” to the index ,turn potentiometer till zero position and make gear in potentiometer shaft tooth with that in opening range shaft . Tighten the lock bolt of gear in potentiometer shaft . Turn on the valve and turn dial plate open mark “ ◆ ” to the index

九、用行程与转矩控制阀门终端位置的选择 （供参考）

9. Choice of Travel and Torsion Controlling Valve Terminal Position (For reference)

阀门种类 Valve Type	控制方法 Control Way	
	关向 Switch for Closing	开向 Switch for OPening
闸阀（自密封）/Gate valve(Self lock)	行程/Travel	行程/Travel
闸阀（强制密封）/Gate valve(Forced lock)	转矩/Torsion	行程/Travel
截止阀 /Stop valve	转矩/Torsion	行程/Travel
蝶阀（密封）/Butterfly valve(Lock)	转矩/Torsion	行程/Travel
蝶阀（非密封）/Butterfly valve(Non-lock)	行程/Travel	行程/Travel
球阀 /Ball valve	行程/Travel	行程/Travel

十 、常见故障及排除方法/10.Breakdown and Elimination

故 障 Breakdown	原 因 Cause	排除方法 Elimination
失控转矩行程开关不起控制作用 Out of control Torsion travel switch fail	1.相序接错 Wrong phase order 2.接触器线圈接错 Wrong contactor coil 3.接触器吸铁不释放 Contactor magnet can't telease	1.调换相序 Adjust phase order 2.调换接线 Adjust connecting wire 3.清洁或调换接触器 Clean or change contactor
行程控制机构失灵 Travel mechanism fail	1.微动开关损坏 Wrong tremble switch 2.微动开关位置移位 tremble switch positoin move 3.弹性板没有到位 Spring plate fail	1.更换 Change 2.检查拧紧 Tighten 3.调整 Adjustment
转矩控制机构失灵 Torsion control fail	1.微动开关损坏 Wrong tremble switch 2.蝶簧特性破坏 Wrong butterfly spring 3.曲拐磨损 Bent crutch wear and tear	1.更换 CHange 2.更换 CHange 3.更换 CHange
位置指示机构失灵 Position indicator fail	1.电位器损坏 Wrong potentiometer 2.啮合齿轮松动 Loosing tooth gear 3.导线接触不良 Bad lead contact	1.更换 CHange 2.拧紧紧定螺丝 Tighten lock bolt 3.更换新线 Change new lead
电机运转不正常有续续嗡嗡声 Motor run abnormal with continuous noise	二相运行 Two phase	检查动力回路接通三相 Check drive circuit and com-necct three phase

十一、检修备品

本装置一般正常情况下允许工作10000次,如因操作检修不当而损坏零件,本厂可随时提供备品。

1、微动开关
2、各种“ 0”型耐油橡胶密封圈
3、各种骨架油封
4、拉簧
5、直立杆
6、接线端子和插件
7、蝶形弹簧

11.Examine and Repair Spare Parts

The device can guarantee 10,000 times working life . We can offer spare parts if wrong operation or main -tenance to damage parts.

11.1 Tremble switch
11.2 Many different “ 0” oil proof rubber lock ring
11.3 Framework and oil seal
11.4 Tension spring
11.5 Vertical pole
11.6 Connecting terminal and plug - in unit
11.7 Butterfly spring

十二、订货须知

1、本装置一般按右旋关闭的阀门调整出厂，如左旋关闭的阀门选配装置应特殊说明。

2、注明阀门全行程总圈数。

3、订落地支架应注明上传或下传。

4、用户如要我厂协助选订本装置，需提供以下资料：

(1) 阀门种类、型号规格、阀杆直径和旋向。

(2) 介质状态，如温度、压力等。

(3) 环境具有爆炸性气体的必须说明，并必须符合本说明书的防爆标志的规定。

(4) 若连接尺寸与本说明书不符，可与本厂协商解决。

(5) 手轮顺时针旋转为关阀，如与此相反必须说明。

(6) 所需规格一般由用户选择，若有困难本厂可为用户选用。

注：本产品说明书内容如有更改恕不另行通知。

12. Order

12.1 The device leave factory by right - hand rotation valve adjustment . Please specify if left hand

12.2 Pay attention to total number of turns of valve travel

12.3 Please specify upper transmission or down transmission if you need ground support frame

12.4 Please offer following information if customer need our factory coordinate ordering the device

12.4.1 Valve type , specification , stem diameter and rotation direction

12.4.2 Medium state , for example temperature, pressure , and so on .

12.4.3 Customer must specify if explosive air existing in environment . And also it must comply with explosive - protection mark regulation in this user guide .

12.4.4 Please discuss with us if connecting size is different from user guide

12.4.5 It will turn off valve clockwise by hand wheel . Please specify if reverse

12.4.6 Customer should decide specification and wc can offer suggestion if customer have problem

Note : There will be no futrher notihe if User Guide content changed .

LI TUO

常州立拓宏伟阀门有限公司

CHANGZHOU LITUO HONGWEIVALVE CO.,LTD

地址：江苏省常州市三河口丰北工业园

电话:0519-88650955

传真:0519-88672690

ADD:Fengbei,Sanhekou Town,Chanzhou

TEL:0519-88650955

FAX:0519-88672690